ORTHOIMAGERY PORTAL

Phase II Charter

Portal Enhancements

Version 2.0

TIM GREGG – DEPARTMENT OF NATURAL RESOURCES

GEORGE SPENCER – DEPARTMENT OF TRANSPORTATION

DAN SAUL – DEPARTMENT OF ECOLOGY

RON HOLEMAN – DEPARTMENT OF NATURAL RESOURCES

TIM YOUNG – DEPARTMENT OF FISH AND WILDLIFE

JOY PAULUS – DEPARTMENT OF INFORMATION SERVICES

DOCUMENT REVISION HISTORY

Version Number	Date	Description
1.0	September 8, 2008	• Initial draft created by Jon White
1.1	January 29, 2009	• 1st draft created by Joy Paulus
2.0	May 7, 2009	• Final draft for submittal to the ISB-GIT
		•
		•

Table of Content

Table of Content 3
1.1. Orthoimagery Portal Strategic Vision 4
1.2. Documents Purpose 5
1.3. Project Statement 5
1.4. Project Objectives 5
1.5. Specific Project Tasks 5
1.6. Project Measures of Success 6
1.7. Constraints 6
1.8. Assumptions 7
1.9. Communication Strategy 7
1.10. Stakeholders 7
1.11. Participating Groups 7
1.12. Orthoimagery Phased Deliverables 9
1.13. Project Phase II Sponsor Guidance 10

1.1. Orthoimagery Portal Strategic Vision

	Public View (ArcGIS Servers)	**Non-Public View** (Arc Image Server)
Phase 1 - Implementation	**Completed July of 2008**	**Completed July of 2008**
Phase 2 Enhancements to Orthoimagery Data Portal	**1. Web Application** Migration to 9.3 –in present form **Issues** Test/Development Environment Failover system	**1. Protected Services** Access to NAIP 2006 data via client connects Cached NAIP 2006 data with just the imagery Security on the server vs. service **2. Pay As You Go Services** Service Level Agreement (SLA) that outlines operations State Program imagery data available WSDOT imagery data available **Issues** Disk capacity Test/Development Environment Failover system Enhanced Security Environment
Phase 3 Long-term Vision and Migration to a WA State Data Portal	**1. Additional Data Sets** Add vector data – 25 base layers used to support WA Location Finder **2. Federated/Centralized Services (SOA)** WA Location Finder Geo-coding Services State Route Mile Posts **3. Metadata** Link to WA Clearinghouse **4. Infrastructure** Add or enhance environment for vector data **Issues** Need for Second ArcGIS Server Performance Test/Development Environment Failover system Issues surrounding Firewalls Impact on existing servers	**1. Other Raster Data Sets** DRG's Marine Charts Hill-shade Raw DEM Multi-band Color Composite Imagery NOAA CCAP (land use) State Highway Map Major Public Lands Map **Issues** Disk capacity Performance Test/Development Environment Failover system Enhanced Security Environment

1.2. Documents Purpose

To communicate and manage the scope of the project as outlined below.

1.3. Project Statement

To increase the technical capacity of the Orthoimage Portal to support the portal funding agencies users through June 30, 2008 for a cost not to exceed our existing FY'09 operating budget as well as for the following biennium.

1.4. Project Objectives

Provide on-going support and improvements to the Orthoimage Portal. Seek innovative solutions that expand the portals usefulness and functionality while keeping long-term maintenance costs at a minimum.

1.5. Specific Project Tasks

There are specific tasks that the Geographic Information technology Committee (GIT) has authorized the Orthoimagery Operations Steering Committee to undertake. These tasks include:

- Acquire the hardware needed to safely store imagery overviews.
- Acquire the disk space needed to store additional statewide imagery from the Departments of Transportation and Natural Resources.
- Upgrade the existing portal infrastructure and application to Environmental Systems Research Institutes (ESRI) 9.3 software release.
- Provide the justification and rational for migrating the existing web mapping application from MS.Net to JavaScript API.
- Acquire disaster recovery mechanisms for raw imagery and cached data sets.

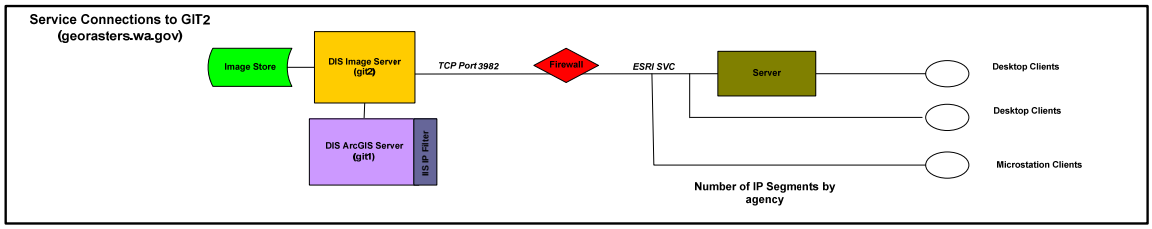

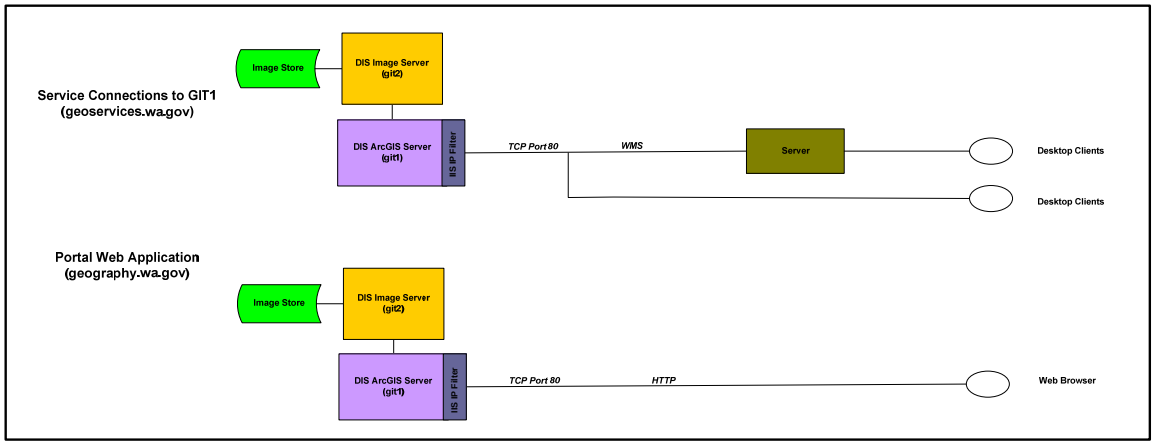

1.6. Project Measures of Success

Objective	Measure	Standard
Expand disk storage for detailed county imagery data.	Successful deployment of new imagery data to new storage device.	New imagery will be available to funding agencies via their GIS desktop software.
Implement Orthoimage Governance Structure for data and operations.	Clear understanding of the funding partners roles and responsibilities.	Data is successfully developed, managed, maintained and made available for distribution.
Increase the number of state imagery data sets made available via the Orthoimage Portal.	Making available additional data sets to increase the portal use and functionality.	Prioritize and load onto the portal 6 additional state/county data sets.
Increase the number of state applications accessing the orthoimagery portal.	The number of applications utilizing the orthoimagery portal via an agency application.	Six funding agency applications accessing the Portal via Tier 2 or Tier 3 services.
Increase the number of users able to directly access the orthoimagery portal images.	The number of direct user connections to the imagery.	100 direct Image Server connections supported via Tier 3 services
Increase the number of users able to access orthoimagery portal images via the public web portal.	The number of users connected for viewing and download of images.	50 concurrent users viewing the data via Tier 1 services and 4 concurrent download data users.
Decrease the number of image portal outages.	The number of times a GIS user is unable to access to portal due to a system outages.	Zero outages.
Decrease the down time experienced during a major systems failures or unforeseen disasters.	The number of times a GIS user is unable to access to portal data due to a major system failure.	1 day down time for data systems failures and 1 week for major disaster recovery.

1.7. Constraints

- The orthoimagery project has limited available funding.
- Computer Services Division (CSD) has a limit number of available resources.
- CSD does not currently employ a GIS technical/solution expert.
- DIS currently has limited understanding of how to successfully grow the orthoimagery services.

1.8. Assumptions

- Partnering state agencies will assist CSD staff when or if technical knowledge gaps are discovered.
- CSD technical staff will remain open to receiving support and technical assistances from partnering agencies.

1.9. Communication Strategy

- The Orthoimagery Operations Steering Committee will meet every other Thursday from 1:30 to 3:30.
- The Orthoimagery Operations Steering Committee will continue to report, in person, the status of the Phase II project during regular GIT Committee meetings.

1.10. Stakeholders

- The Geographic Information Technology (GIT) Committee.
- Orthoimagery Portal Project Funding Partners (Departments of Ecology, Transportation, Fish and Wildlife, Natural Resources, Information Services, Military, Revenue and the Recreation and Conservation Office).

1.11. Participating Groups

Participants	*Description*	*Role*
Information Services Board/ Geographic Information Technology Committee (ISB/GIT)	Provides executive sponsorship and leadership. This standing committee of the Information Services Board (ISB) is charged with representing the strategic interest of a coordinated, enterprise approach to using geographic information technology and, providing leadership for the implementation of cost-effective, collaboratively-developed, spatial data management solutions.	Responsibilities: • Executive decision makers. • Provides necessary funding/resources. • Provides oversight. • Serves as advocate for Orthoimagery Portal. • Eliminates obstacles to success of the Orthoimagery Portal. • Provides policy direction. • Approval charters for framework governance groups.
Orthoimagery Data Stewardship (Co-stewards)	Co-stewards provide an important leadership role for the Orthoimage data theme. Insures that data management issues are coordinated and communicated between the Orthoimagery Steering Committee and individual Agency Data Stewards. The	Responsibilities: • Ensures consistency in all aspects of the implementation of orthoimagery data. • Leadership of the technical workgroup.

Participants	*Description*	*Role*
	steward agencies will help build a consistent and integrated single source for orthoimagery data based on agreed-upon standards. Joint Steward Agencies: • George Spencer, Department of Transportation • Tim Gregg, Department of Natural Resources	• Identify the business processes for managing and maintaining orthoimagery data. Such process shall include stewardship roles, responsibilities and governance structures. • Identify and prototype technical methods which support cooperative management and maintenance of the data.
Portal Operations Steering Committee	Represents the Portal interests to the ISB/GIT and data theme stewards. Coordinate the phased implementation and enhancements to the Orthoimagery Portal. Members: • George Spencer, Department of Transportation • Ron Holeman, Department of Natural Resources • Tim Young, Department of Fish and Wildlife • Dan Saul, Department of Ecology • Joy Paulus, Department of Information Services • David Jennings, Department of Health • George Alvarado, Department of Revenue Support Staff: • Jacque Whaley, Department of Transportation • Alan Smith, Department of Transportation	Responsibilities: • Work with executive sponsors and Orthoimagery portal data theme stewards on the operation and enhancements to the Portal. • Identify common approaches to use in access and dissemination of orthoimagery data. • Oversee portal operations. • Coordinate infrastructure acquisition and loading of new data. • Coordinate funding. • Establish data distribution conditions. • Develop and maintain its charter including sponsor acceptance of the charter. • Provide technical support and assistance during the course of the Phase II Portal Enhancement Project • Estimated time commitment 8 hrs per week
Portal Operations Team	Operations and Staffing • Operations Manager. Technical manager that can coordinate with DIS infrastructure teams (network, security, server admin,	Operational Tasks • Administer the base platform hardware and operating system. • Administer the application

Participants	*Description*	*Role*
	mass storage) and independently make day-to-day operational decisions. • Application System Administrator. An expert on application related software resident on the portal i.e. an ESRI expert. • Data Administrator (DA/DBA). • Systems Administrator (DIS). Members: Don Saul, WDFW - lead Randy Kreuziger, WDFW - support Darby Veeck, ECY- consultation David Jellison and James Fectaeu, DIS – system operations	software and associated database. • Backup/Recovery procedure. • System performance monitoring, system tuning. • Security Administration logins, passwords. • Portal Help Desk. • Implementing new image sets. • Create staffing plan. • Estimated time commitment 16 hrs per week
Project Management	Jon White Joy Paulus	• Maintain the projects schedule. • Maintain the project risks register. • Maintain the project charter. • Produce project status reports. • Ensure the project stays on time and within scope. • Estimated time commitment 8 hrs per week • Coordinate team meetings. • Create team meeting agendas. • Meetings minutes. • Maintain the projects budget. • Estimated time commitment 16 hrs per week

1.12. Orthoimagery Phased Deliverables

High-level listing of project millstones

Phase 1: Stand up the state's first data portal for Orthoimagery data. Provide access to three tiers of Orthoimage data services including a web application that allows public access to the imagery data for viewing and data download.

Phase 2: Stabilize the production portal through extensive testing and monitoring and provide access to additional image data sets. Upgrade the software environment and web mapping application to the 9.3 GIS software release. Explore enhancements to the existing web mapping application. Enhance the server environment with added production capacity to support new data, backup and recovery, new users, and application enhancements as funding allows.

Phase 3: Long-term vision and migration of the existing portal to a state data portal.

1.13. Project Phase II Sponsor Guidance

Having reviewed the Project Phase II Charter, The Geographic information Technology (GIT) Committee and Orthoimage Project Team recommends that the project:

- ❑ GO to Implementation
- ❑ Not Go

(Signature, date)